PYRAMID IMAGING

M6Z1212-3S

6X 12.5mm-75mm F1.2
for 2/3type Cameras,Manual Zoom
C-Mount

Model No.		M6Z1212-3S		Effective Lens Aperture	Front	φ46.5mm	
Focal Length		12.5mm - 75mm			Rear	φ15.6mm	
Max.Aperture Ratio		1:1.2		Back Focal Length		15.4mm	
Max.Image Format		8.8mm x 6.6mm(φ11mm)		Flange Back Length		17.526mm	
Operation Range	Iris	F1.2 - F16C		Mount		C-Mount	
	Focus	1m - Inf.		Filter Size		M55 P=0.75mm	
	Zoom	12.5mm - 75mm		Dimensions		φ59.5mm x 114.5mm	
Control	Iris	Manual		Weight		483g	
	Focus	Manual					
	Zoom	Manual					
Angle of View	D	2/3type	46.9° - 8.3°	1/2type	35.1° - 6.2°	1/3type	26.6° - 4.7°
	H		38.3° - 6.7°		28.3° - 5.0°		21.3° - 3.8°
	V		29.2° - 5.1°		21.3° - 3.8		16.1° - 2.8
Operating Temperature		-20℃ - +50℃					

Dimensions

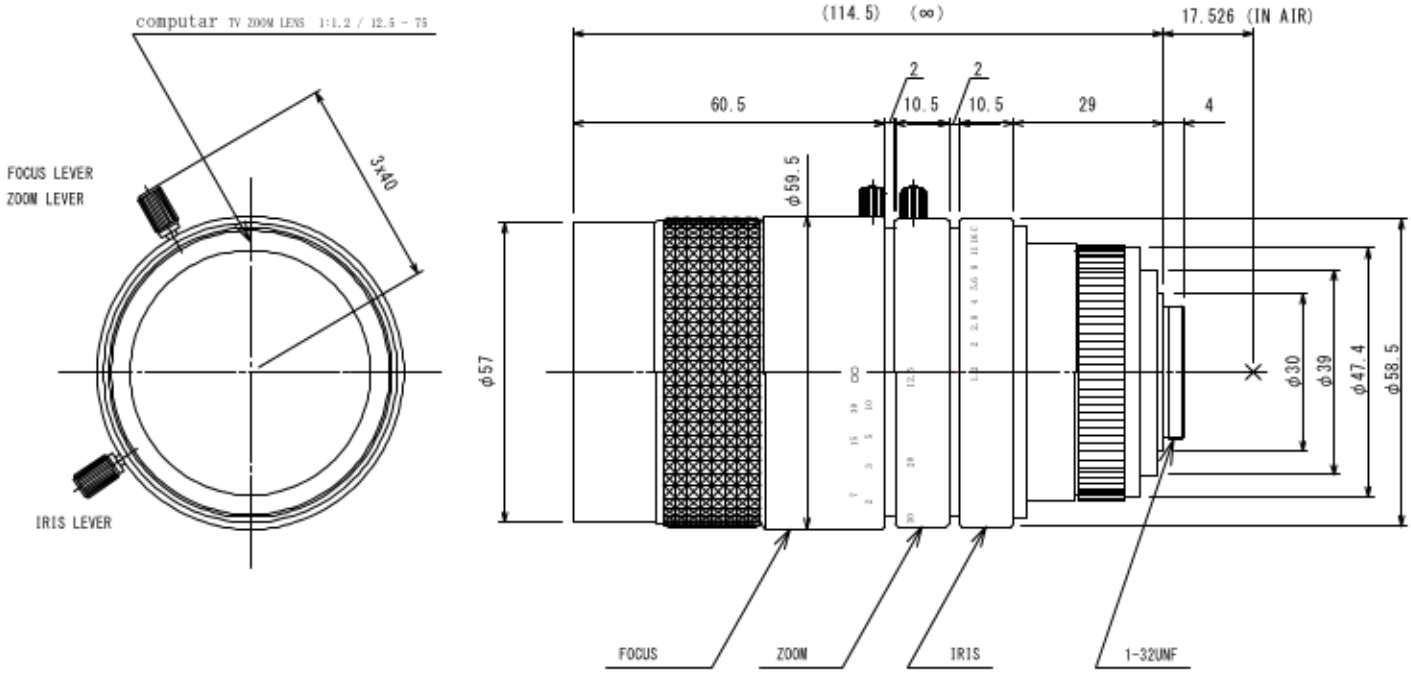

Pyramid Imaging, Inc.
4951 E Adamo Dr. Suite 224
Tampa, FL 33605
HUBZone & ISO9001:2008 Certified

Phone: 813-984-0125
Fax: 866-874-9521
Sales@PyramidImaging.com
www.PyramidImaging.com