PYRAMID IMAGING

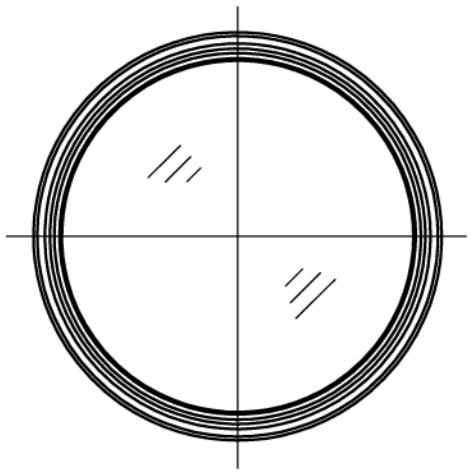

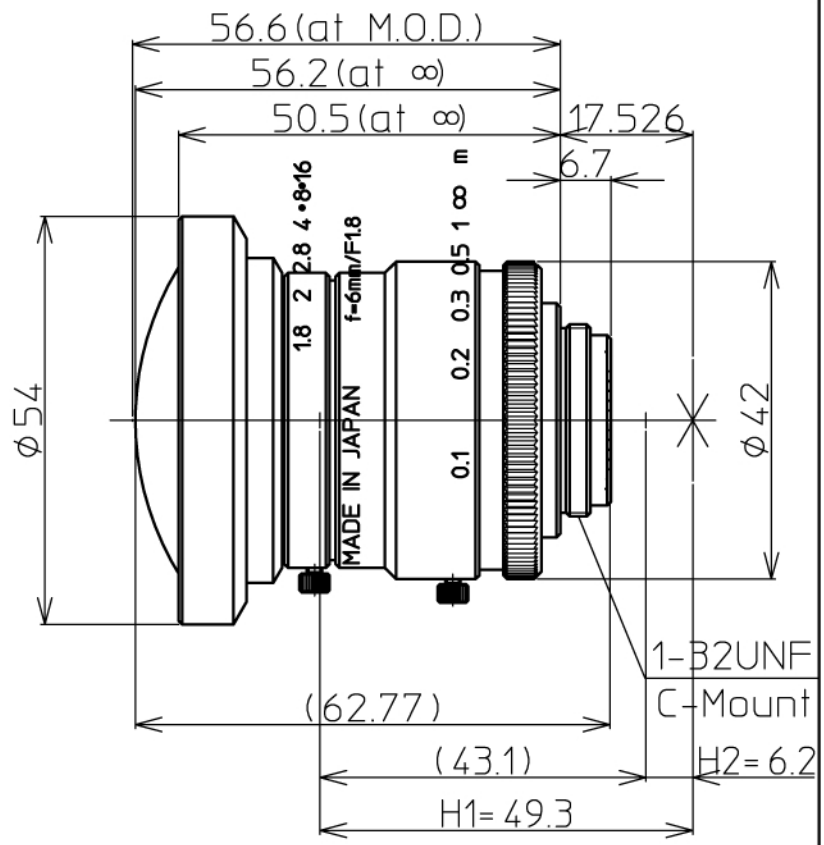

1" 1.8/6mm		2/3"	1/2"
FOCAL LENGTH	f=6mm		
MAX. DIAMETER (RATIO)	F=1:1.8~16		
PICTURE SIZE	12.8x9.6mm	8.8x6.6	6.4x4.8
ANGLE VER. ANGLE	79.4°	58.0°	43.2°
HOR. ANGLE	96.8°	74.1°	56.4°
DIA. ANGLE	108.4°	87.7°	68.5°
DISTORTION (TV)	-0.2%	-1.8%	-1.5%
MINIMUM FOCUS DISTANCE	0.1m		
FLANGE BACK	17.526 mm in air		
BACK FOCUS	11.1mm in air		
FILTER SCREW SIZE	----		
FRONT/REAR EFFECTIVE DIA.	Front Ø 46.0mm Rear Ø 16.8mm		
MOUNT	C-MOUNT		
EXIT PUPIL	-293mm		
TEMPERATURE RANGE	-10~+50° C		
STORNG TEMPERATURE RANGE	-20~+60° C		
WEIGHT	215g		

NOTE:Specifications and availability are subject to change without notice
注）本仕様については、予告なしに変更する場合があります。

Kowa

LM6HC

1" F1.8 f=6mm