Pyramid Imaging
945 East 11th Avenue Tampa, FL 33605
Phone: (813) 984-0125
Contact: Sales@ pyramidimaging.com
https://pyramidimaging.com

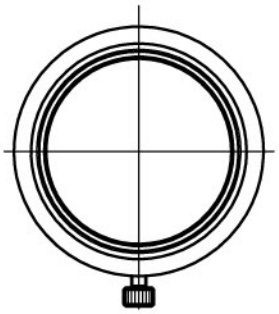

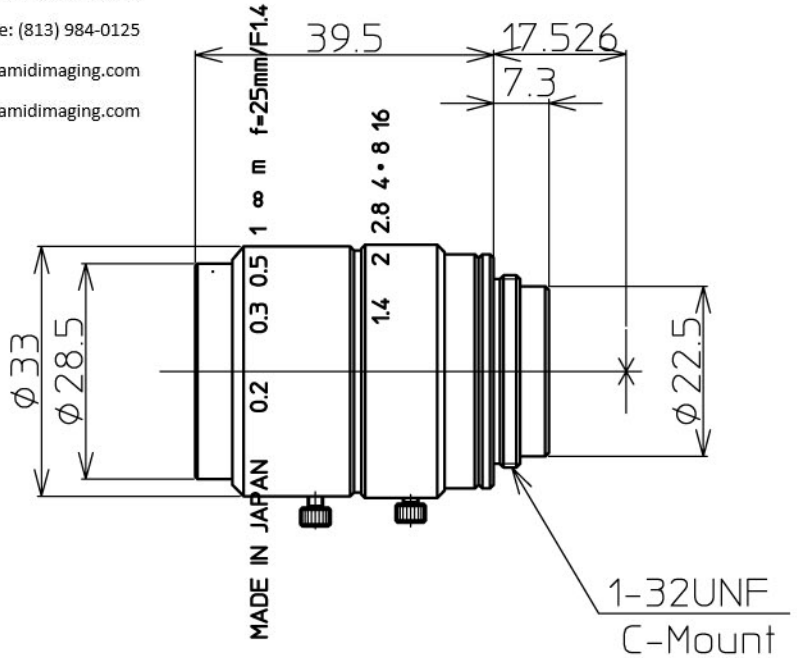

2/3" 1.4/25mm C		1/2"	1/3"
FOCAL LENGTH	f=25mm		
MAX. DIAMETER (RATIO)	F=1:1.4~16		
ELEMENT	6 groups 8 elements		
PICTURE SIZE	6.6x8.8mm	4.8x6.4	3.6x4.8
ANGLE VER. ANGLE	14.8°	10.5°	7.9°
HOR. ANGLE	19.6°	14.0°	10.5°
DIA. ANGLE	24.3°	17.5°	13.2°
DISTORTION (TV)	-0.04%	-	-
SHOOTIG RANGE AT VER.	53.3 mm	38.7	29.0
MINIMUM FOCUS HOR.	71.1 mm	51.7	38.7
DISTANCE DIA.	89.0 mm	64.6	48.4
MINIMUM FOCUS DISTANCE	0.2m		
FLANGE BACK	17.526 mm in air		
BACK FOCUS	11.7mm in air		
FILTER SCREW SIZE	M27.0x0.5		
FRONT/REAR EFFECTIVE DIA.	Front Ø 24.0mm Rear Ø 12.8mm		
MOUNT	C-MOUNT		
EXIT PUPIL	-80.0		
TEMPERATURE RANGE	-10~+45° C		
STORAGE TEMPERATURE RANGE	-40~+60° C		
RESOLUTION CENTER/CORNER	Center 120lp/mm Corner 100lp/mm		
WEIGHT	89g		

注）本仕様については、予告なしに変更する場合があります。

Kowa

		尺度 1/1	承認 杉田	製図 八木
		2/3" F1.4 f=25mm		
07.7.19		LM25JC1MS		
	作成年月日			