Pyramid Imaging
945 East 11th Avenue Tampa, FL 33605
sales@pyramidimaging.com
www.pyramidimaging.com
813-786-3785

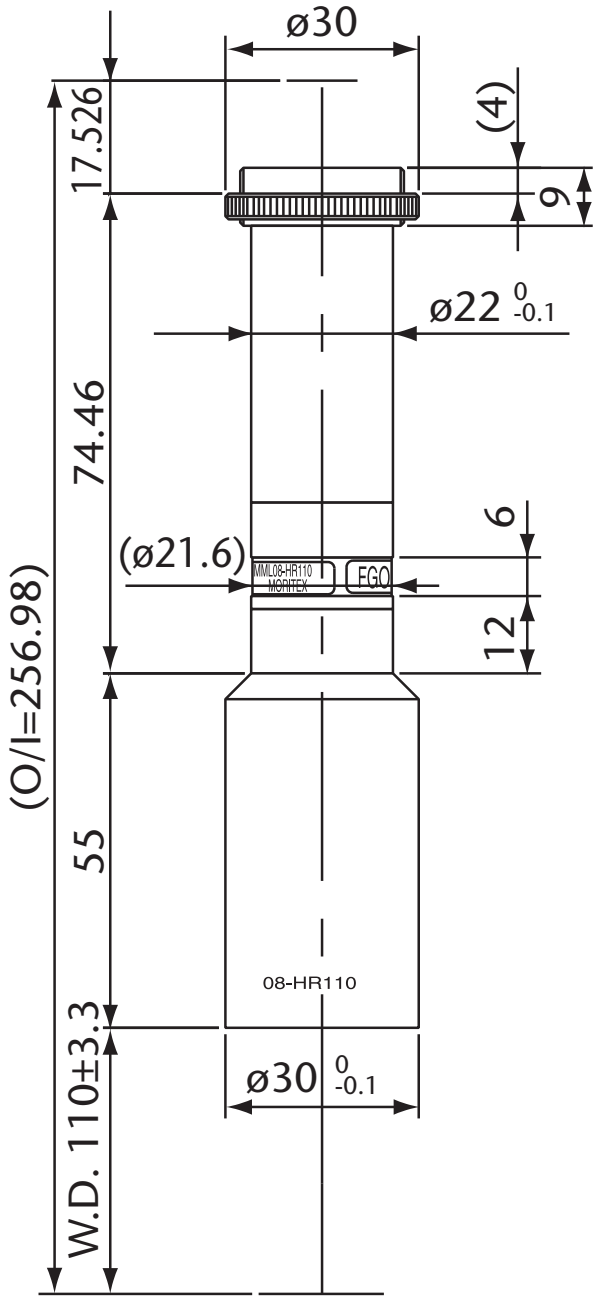

Model Name : MML08-HR110
SCHOTT MORITEX Corporation