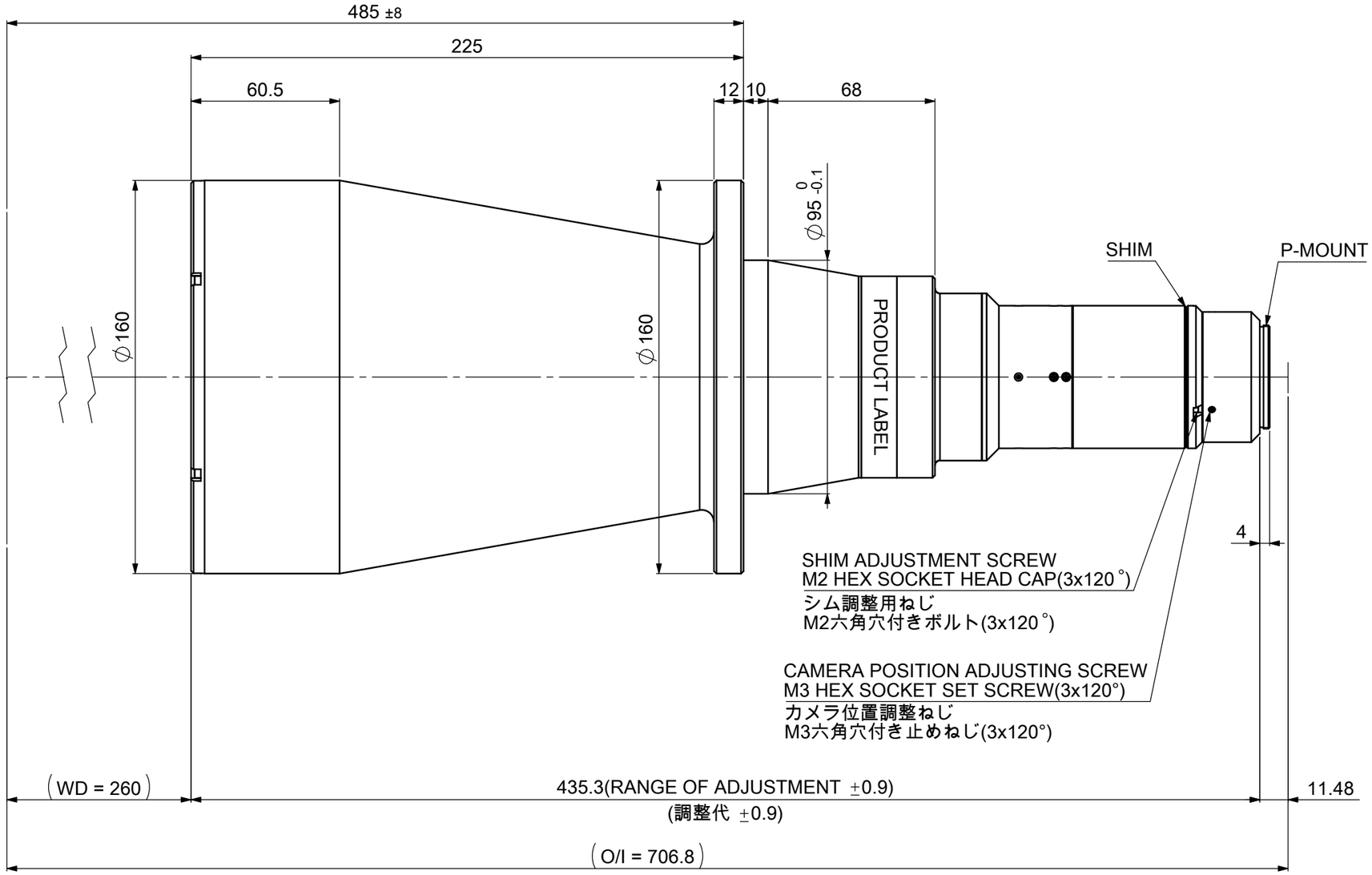

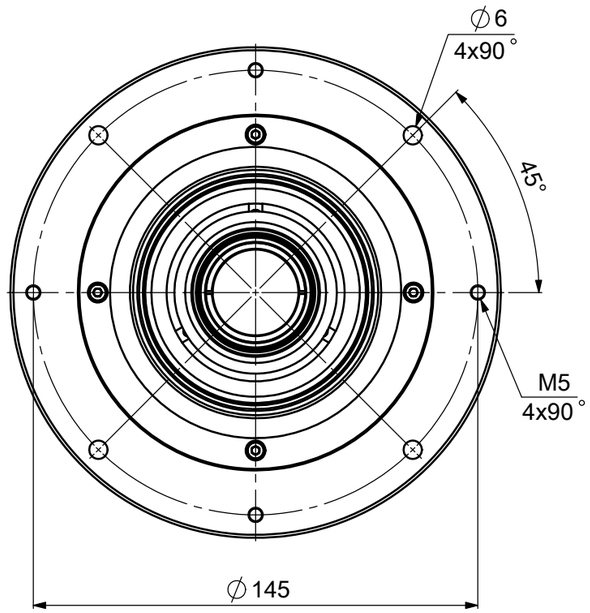

MOUNTING PORTION
DETAIL VIEW

フランジ取付部詳細

MAGNIFICATION : 0.17x
光学倍率 : 0.17x

Pyramid Imaging

945 East 11th Avenue Tampa, FL 33605

Phone: (813) 984-0125

Contact: Sales@ pyramidimaging.com

https://pyramidimaging.com

Model Name : MTL-13523P-017
MORITEX CORPORATION