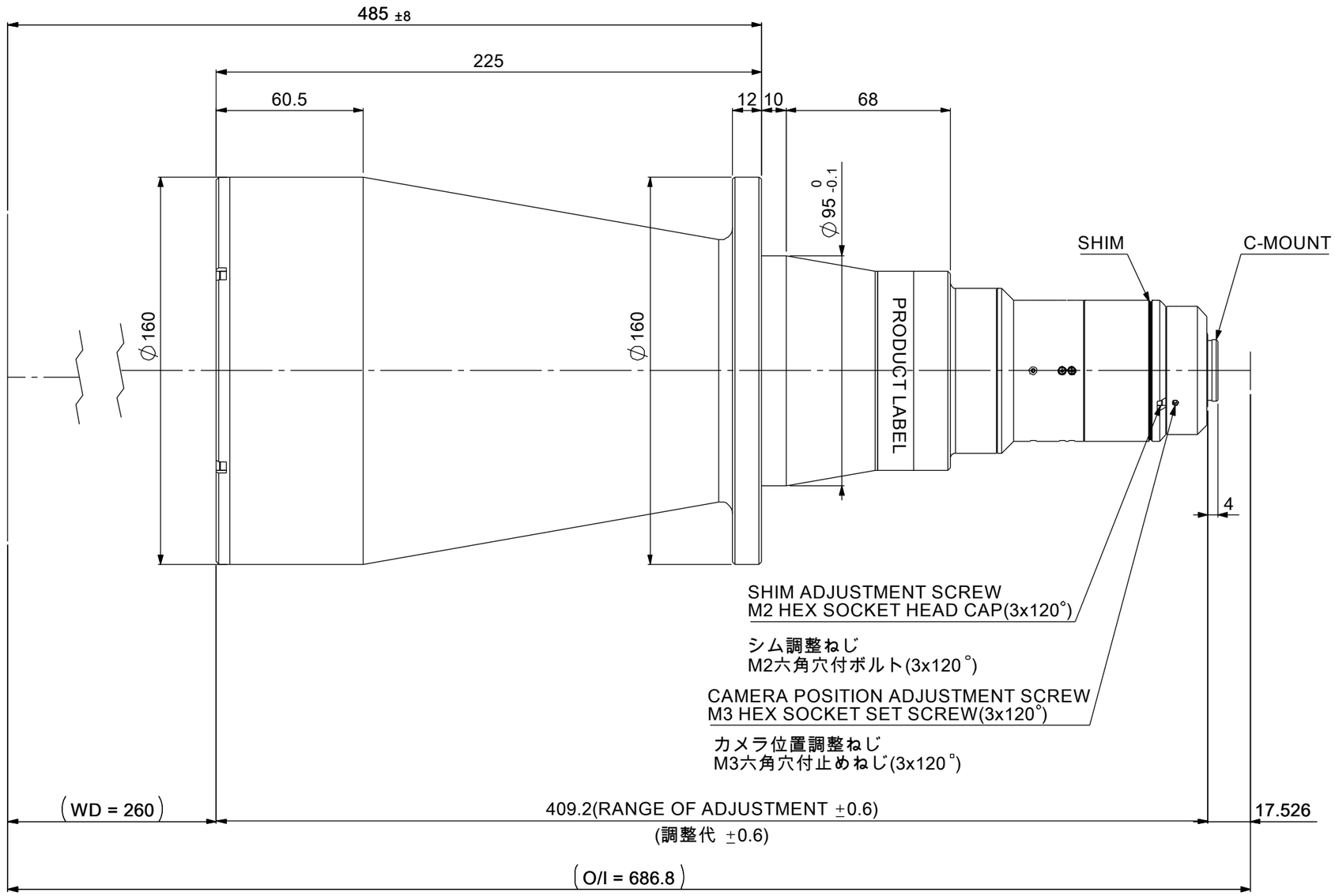

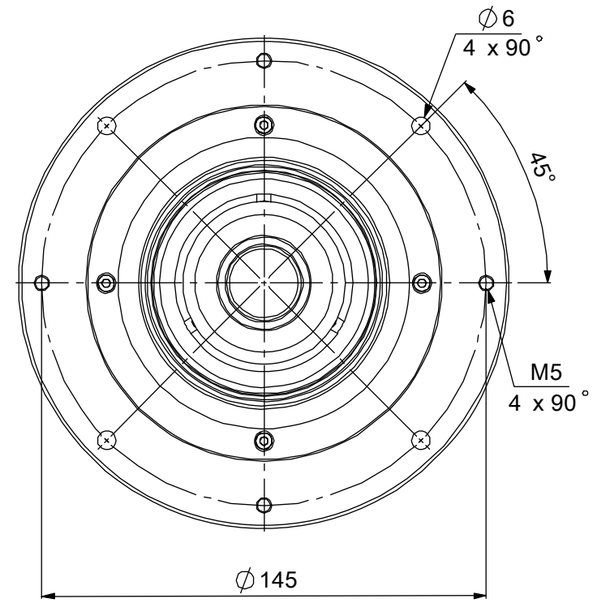

MOUNTING PORTION
DETAIL VIEW
フランジ取付部詳細

MAGNIFICATION : 0.14 x
光学倍率 : 0.14 x

Pyramid Imaging

945 East 11th Avenue Tampa, FL 33605

Phone: (813) 984-0125

Contact: Sales@ pyramidimaging.com

https://pyramidimaging.com

Model Name : MTL-13518C-014
MORITEX CORPORATION