Pyramid Imaging
945 East 11th Avenue Tampa, FL 33605
Phone: (813) 984-0125
Contact: Sales@ pyramidimaging.com
https://pyramidimaging.com

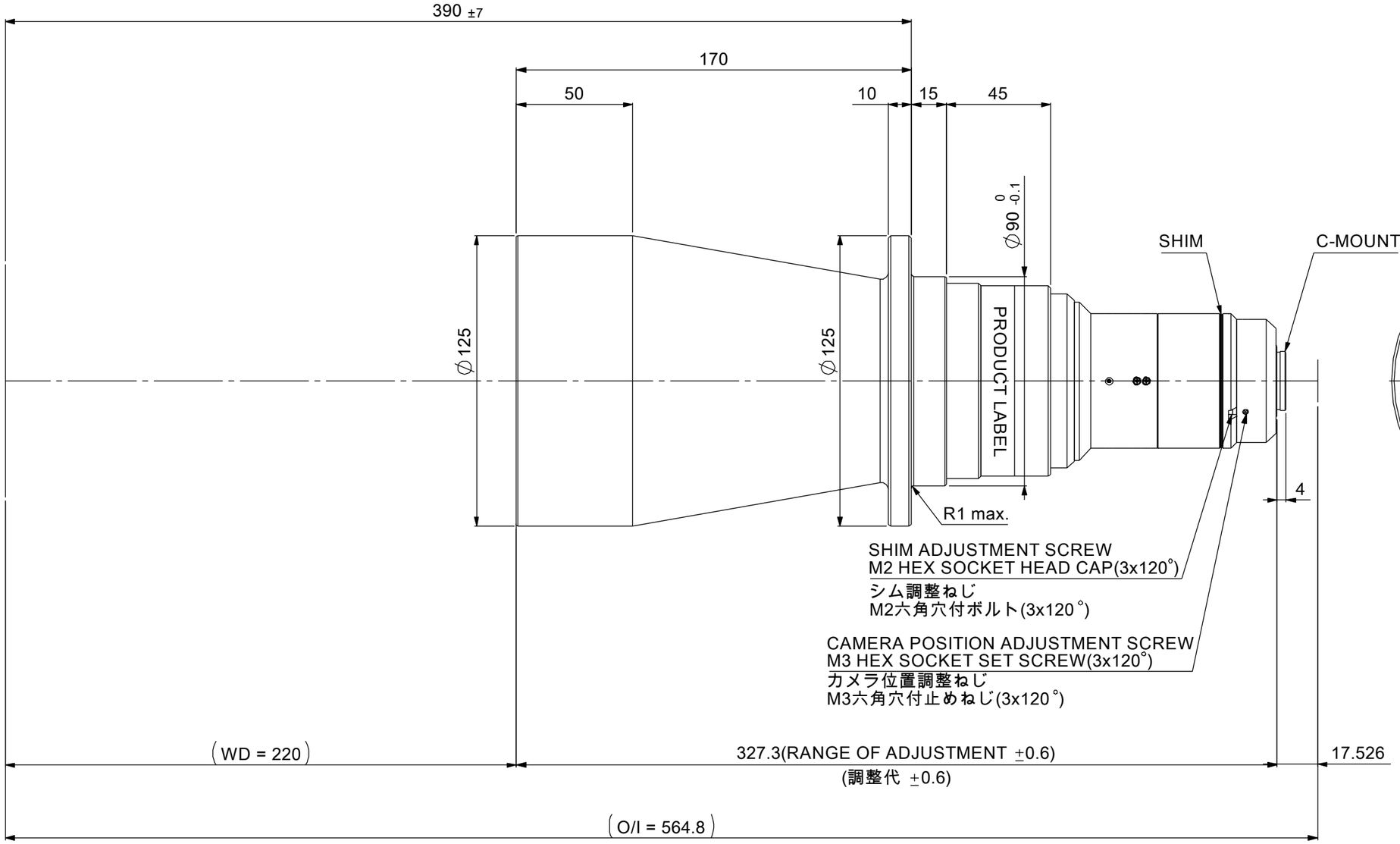

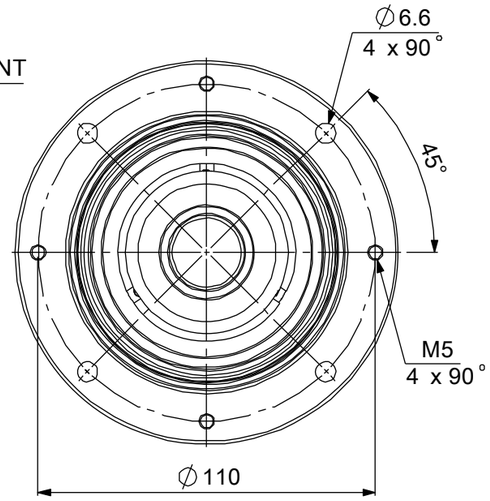

MOUNTING PORTION
DETAIL VIEW
フランジ取付部詳細

MAGNIFICATION : 0.19x
光学倍率 : 0.19x

Model Name : MTL-10018C-019
MORITEX CORPORATION