REVISIONS				
	REV.	DESCRIPTION	DATE	APPROVED
	A	INITIAL RELEASE	3/30/2014	
	B	REDESIGNED CENTER HUB AREA AND PCB	6/1/2014	

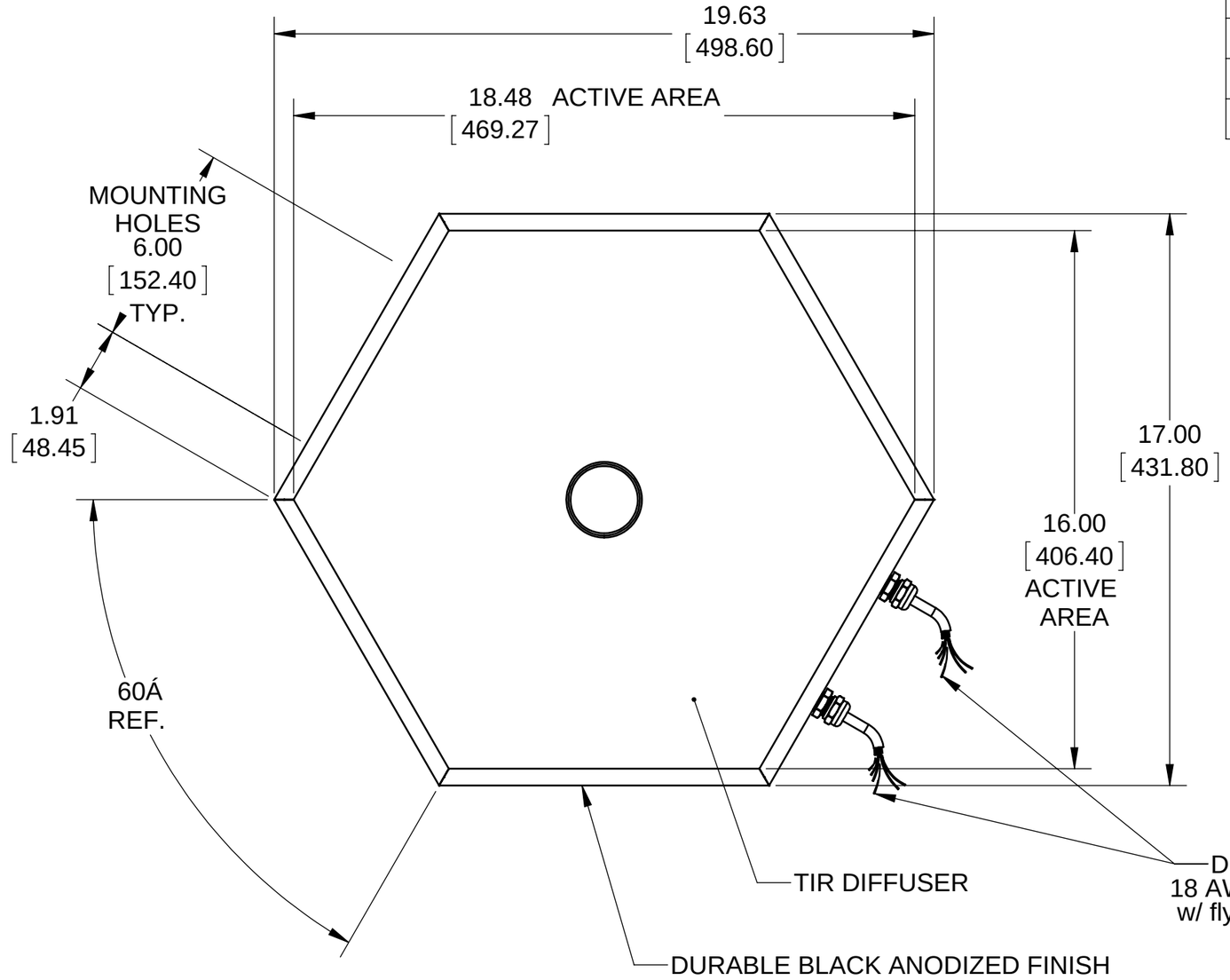

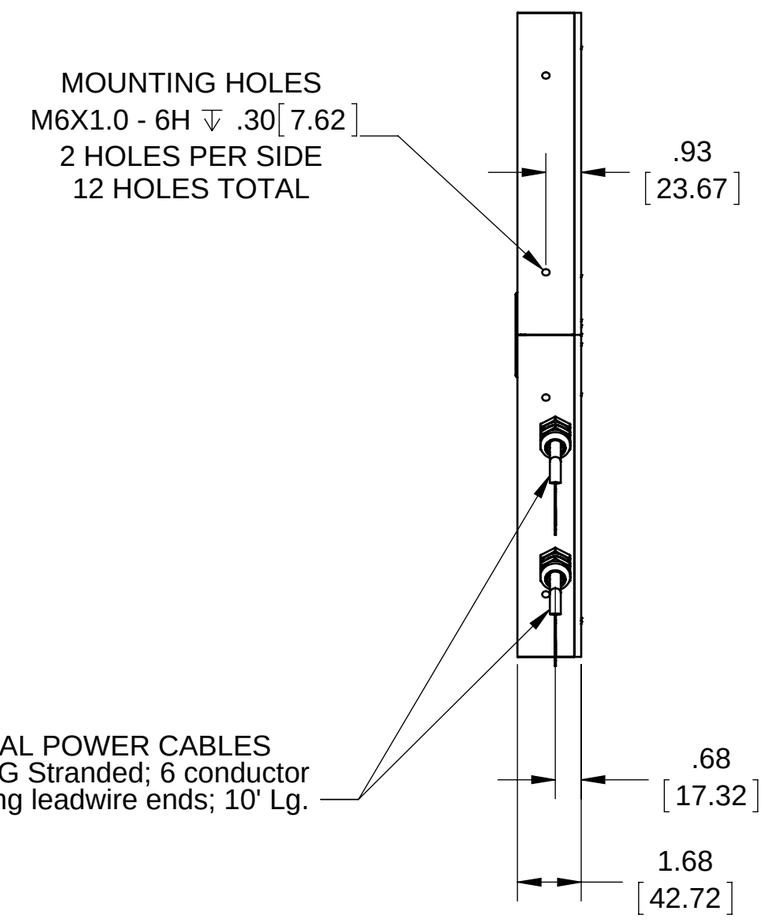

REV

Pyramid Imaging

945 East 11th Avenue Tampa, FL 33605

Phone: (813) 984-0125

Contact: Sales@ pyramidimaging.com

https://pyramidimaging.com